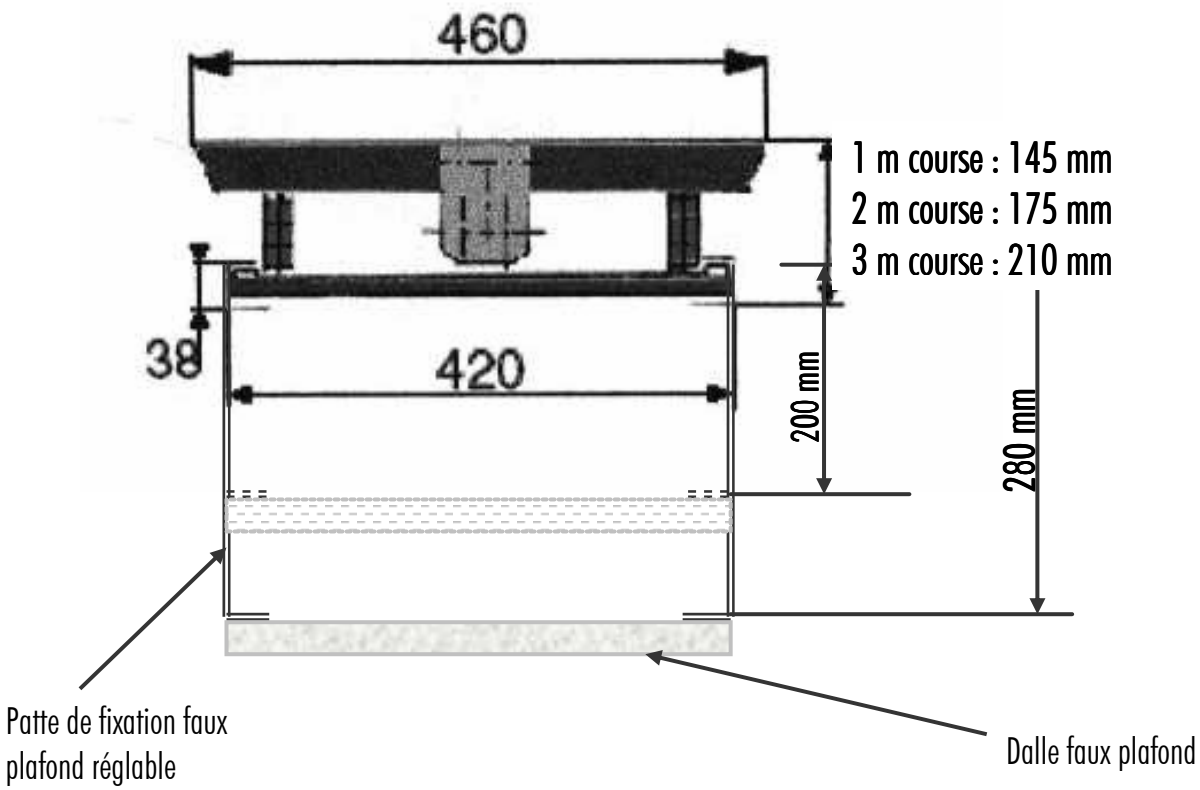SVP0501/SVP0502/SVP0503 MINI-PANTOGRAPHE 30KG fixation Faux plafond